6’ Pleated Table Cover

RED IRON
BRAND SOLUTIONS

BACKGROUND

ART GUIDELINES

Template is set up to 10% scale.

Do not resize template or change size/shape of pole sleeve.

Convert all text to outlines.

We accept MAC or PC versions of art.

Digital Printing Requirements: All art must be Vector/original art, saved as an .EPS or an .AI file, with all fonts converted to curves. If the artwork includes a photographic image, the image must be submitted as a 300 DPI (150 DPI minimum) at actual print size. Please note that we are limited to using files that are 900MB or less. Files which are too large to be emailed may be submitted, at no charge, through Wetransfer.com

Please keep all Text and/or logos 1” from all sides

(Note: PDF files may be useable but must be reviewed first by our Art Dept. to assure quality)

Top

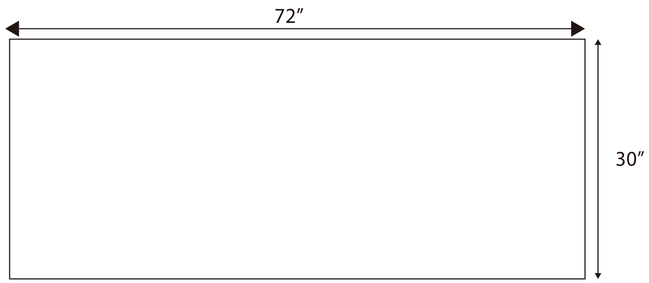

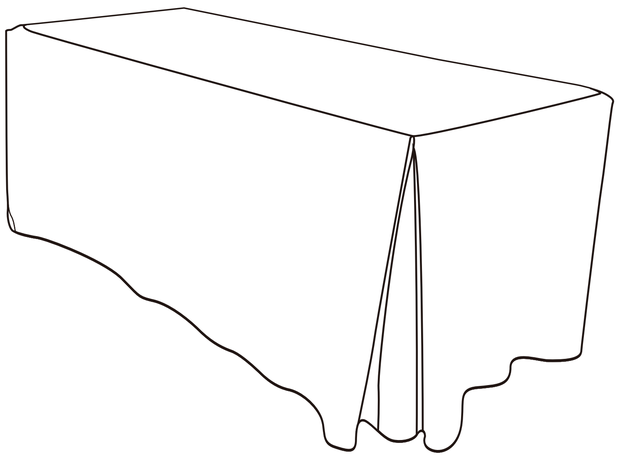

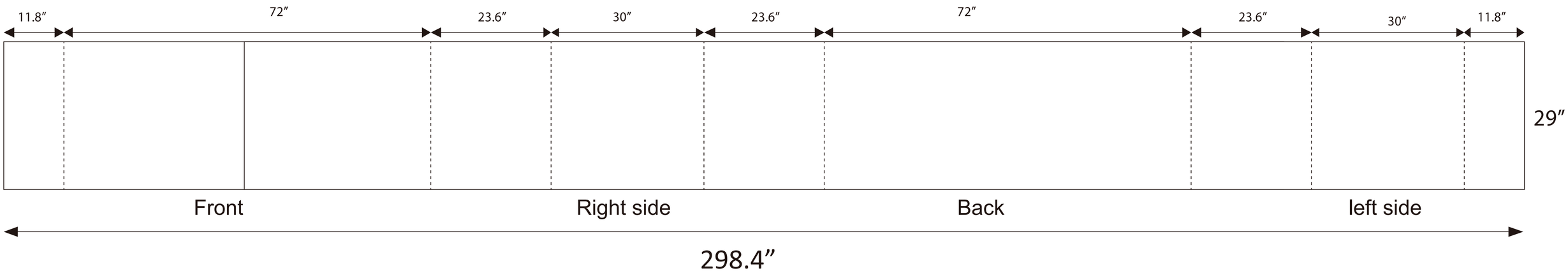

8’ Pleated Table Cover

RED IRON
BRAND SOLUTIONS

BACKGROUND

ART GUIDELINES

Template is set up to 10% scale.

Do not resize template or change size/shape of pole sleeve.

Convert all text to outlines.

We accept MAC or PC versions of art.

Digital Printing Requirements: All art must be Vector/original art, saved as an .EPS or an .AI file, with all fonts converted to curves. If the artwork includes a photographic image, the image must be submitted as a 300 DPI (150 DPI minimum) at actual print size. Please note that we are limited to using files that are 900MB or less. Files which are too large to be emailed may be submitted, at no charge, through Wetransfer.com

Please keep all Text and/or logos 1″ from all sides

(Note: PDF files may be useable but must be reviewed first by our Art Dept. to assure quality)

Top

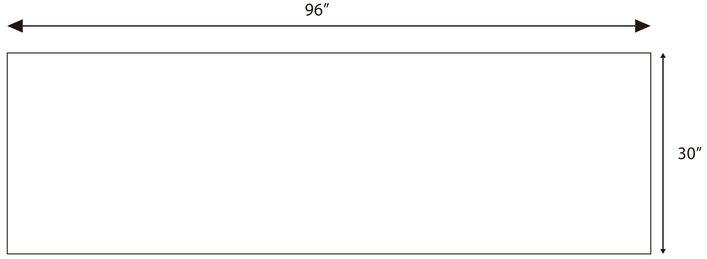

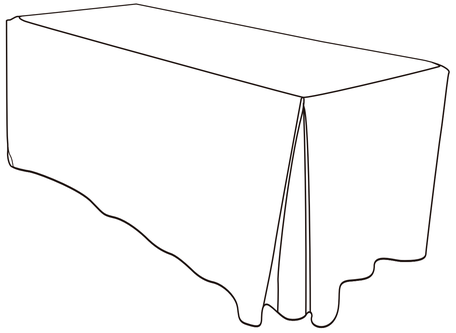

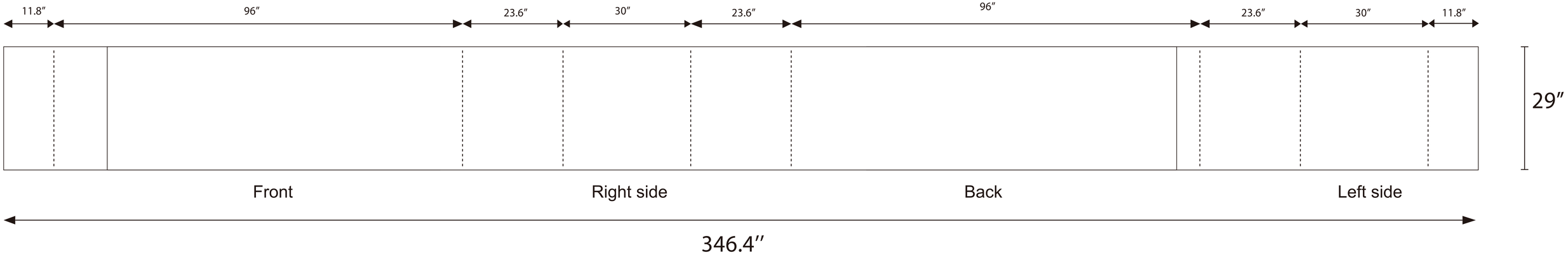

Rectangle seen in the middle represents the top of the table. The lines of the rectangle will not print

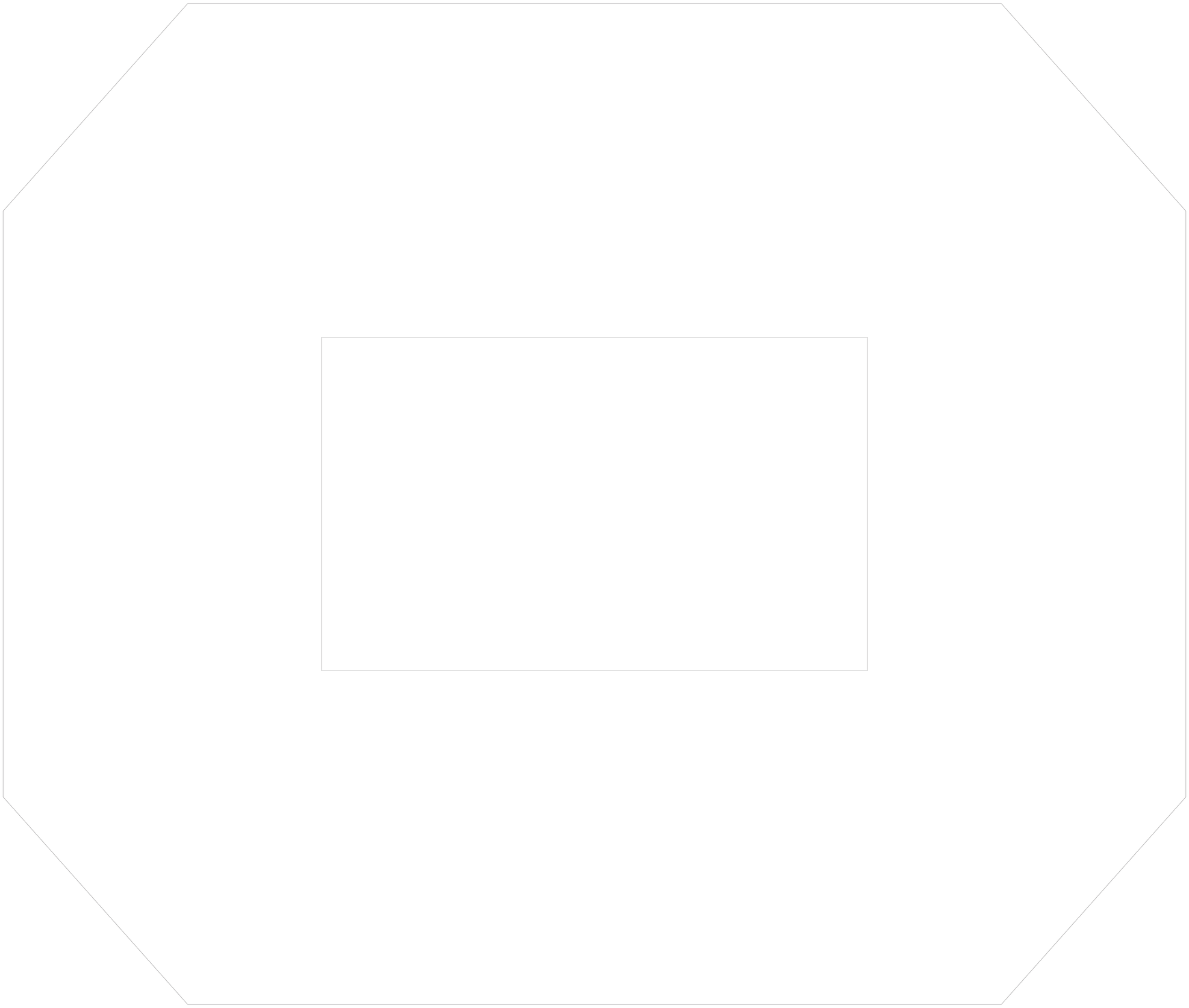

Item #112-640

Art Requirements for Digital Printing

We accept MAC or PC versions of art.

Digital Printing Requirements: All art must be Vector/original art, created in Adobe Illustrator Version CS6 or less, saved as an .EPS or an .AI file, with all fonts converted to curves. If the artwork includes a photographic image, the image must be submitted as a 300 DPI at actual print size. Please note that we are limited to using files that are 900MB or less. Files which are too large to be emailed may be submitted, at no charge, through Wetransfer.com

(If possible, when supplying or creating the file, please submit or create the file in CMYK.)

(Note: PDF files may be useable but must be reviewed first by our Art Dept. to assure quality)

TEMPLATE IS AT 100% SCALE

Rectangle seen in the middle represents the top of the table. The lines will not print.

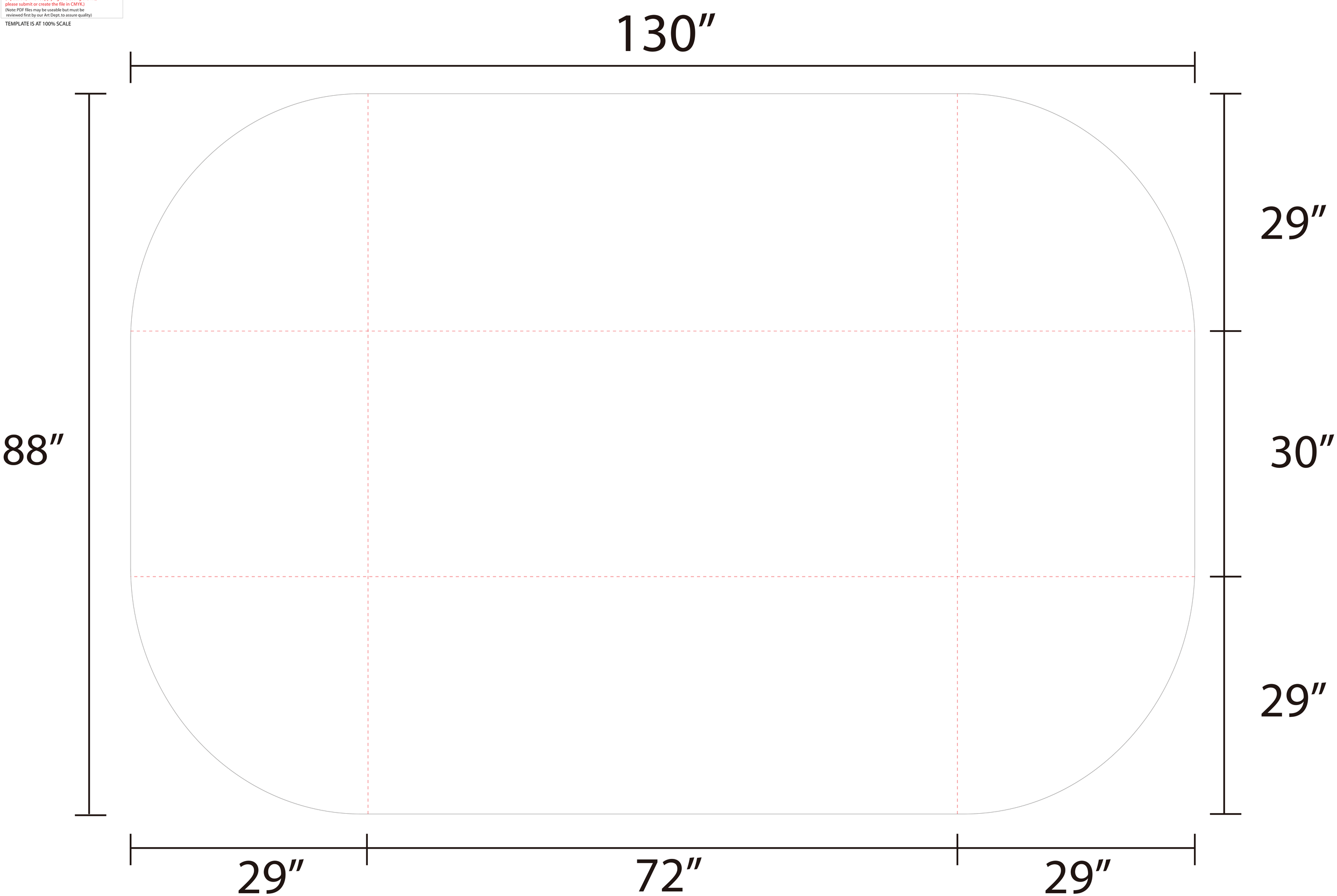

Item # 112-840

Art Requirements for Digital Printing

We accept MAC or PC versions of art.

Digital Printing Requirements: All art must be Vector/original art, created in Adobe Illustrator Version CS6 or less, saved as an .EPS or an .AI file, with all fonts converted to curves. If the artwork includes a photographic image, the image must be submitted as a 300 DPI at actual print size. Please note that we are limited to using files that are 900MB or less. Files which are too large to be emailed may be submitted, at no charge, through Wetransfer.com

(If possible, when supplying or creating the file, please submit or create the file in CMYK.)

(Note: PDF files may be useable but must be reviewed first by our Art Dept. to assure quality)

TEMPLATE IS AT 100% SCALE
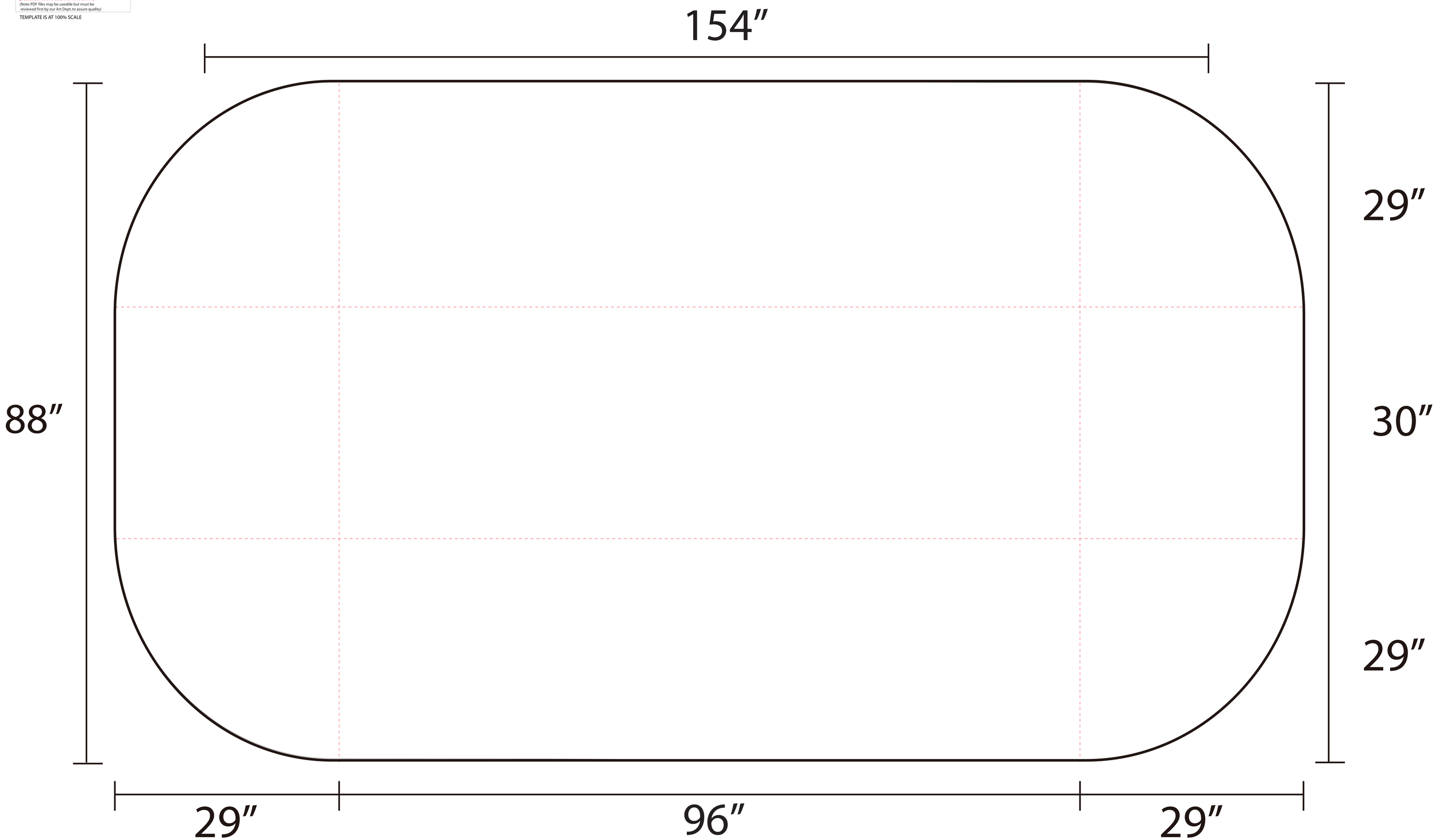
Rectangle seen in the middle represents the top of the table. The lines will not print.